EE-211L Basic Electronics

Spring 2026

Project Proposal: Cascaded Amplifier

Team Members:

Tehniyat Ayub (ta10600) & Mohammad Yousuf Lali (ml10014)

Instructor:

Miss Hira Mustafa

1 Objective

Design and implement a cascaded amplifier for a 10mV input signal using BJTs (2N3904), ensuring high voltage gain, impedance matching and stable signal amplification.

2 Introduction

Common Emitter (CE) and Common Collector (CC) amplifiers are essential components in electronic circuits, used to enhance weak signals for further processing. A single-stage amplifier typically provides a voltage gain of up to about 20 before distortion or clipping occurs. To overcome these limitations, cascaded amplifiers are used, where multiple amplifier stages are connected in sequence to improve overall performance.

In this project, we will design a five-stage cascaded amplifier using the following configuration:

CE - CC - CE - CC - CE

- CE Stages – Used for voltage gain, provides high amplification but has high output impedance.
- CC Stages – Used for impedance matching, acts as a buffer, ensuring efficient signal transfer by offering high input and low output impedance.

This combination offers an amplifier design that ensures:

- High overall voltage gain through the CE stages.
- Proper impedance matching in the CC stage for efficient signal transfer.
- Improved stability and reduced loading effects, preventing signal clipping.

We will ensure that the designed amplifier meets the required performance criteria for amplification by carefully selecting component values and biasing techniques.

3 Block Diagram

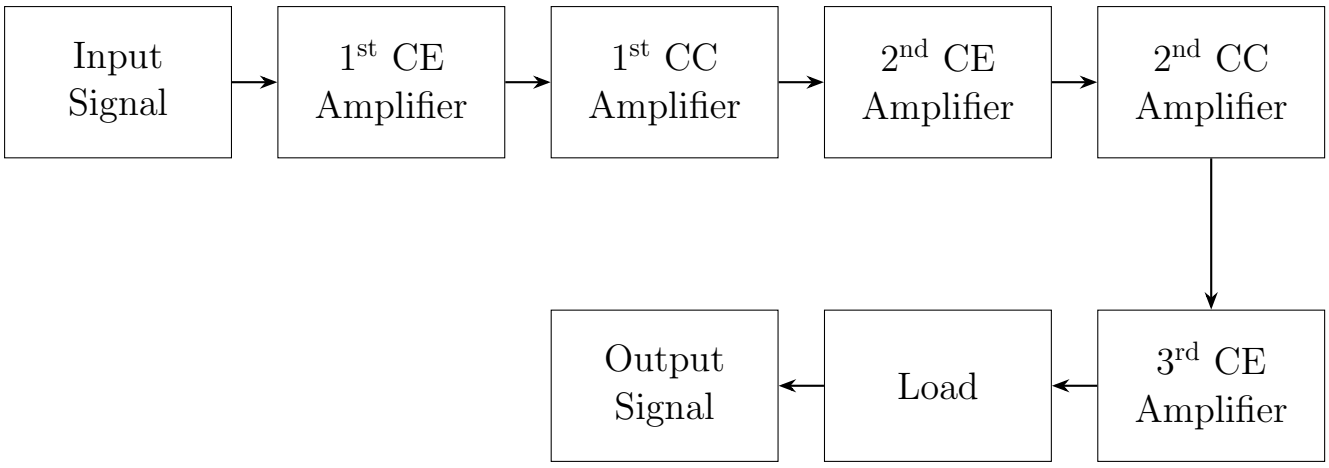

4 Proposed Schematic

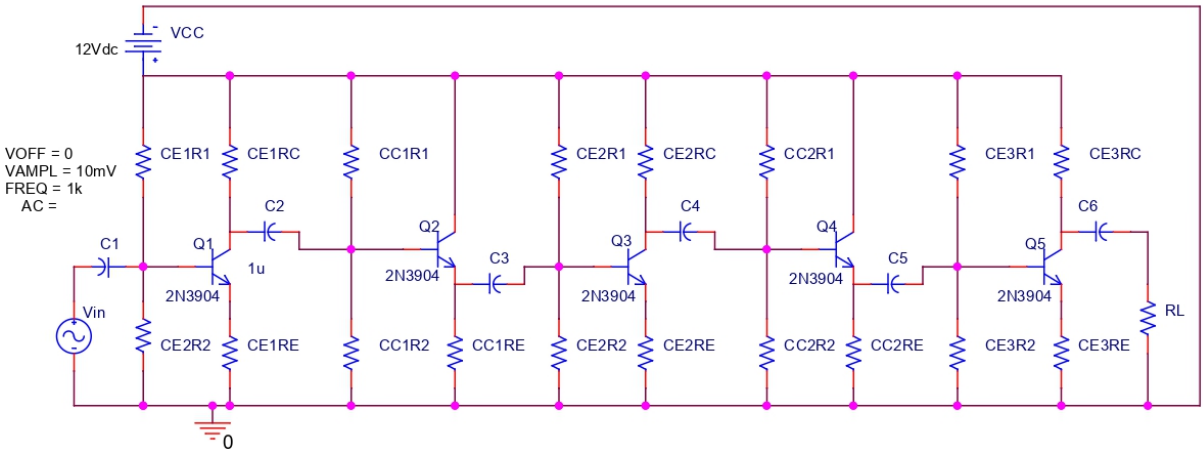

5 List of Components

- **Resistors**
- **Capacitors**
- **2N3904 BJTs**
- **Function Generator**
- **DC Power Supply**

6 Expected Outcome

With this five-stage cascaded amplifier we are aiming that a 10 mV input signal will be amplified to approximately 10 V, corresponding to an overall voltage gain of about 1000 and proper impedance matching for minimal loss and no signal clipping.

7 Task Division

S.No	Task	Member
1	Calculations	Tehniyat
2	Report Generation	Yousuf
3	Simulation	Both
4	Physical Circuit	Both
5	Analysis and Debugging	Both

Table 1: Task Division